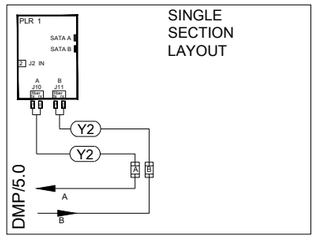

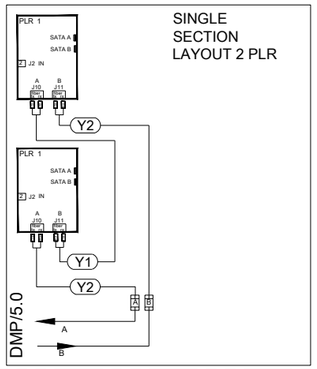

2 VERTICAL SECTION

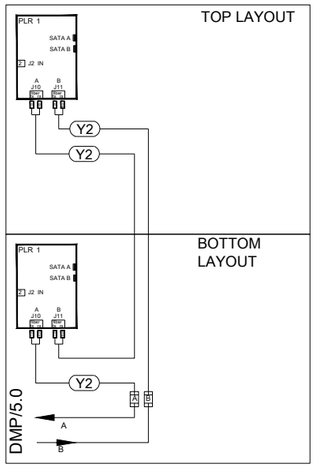

2 VERTICAL SECTION USING 2 PLRS IN BOTTOM SEC

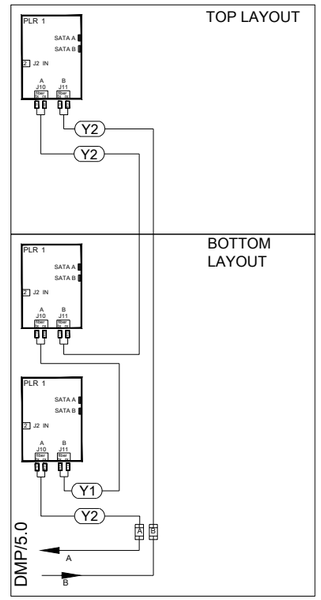

2 VERTICAL SECTION USING 2 PLRS IN TOP SEC

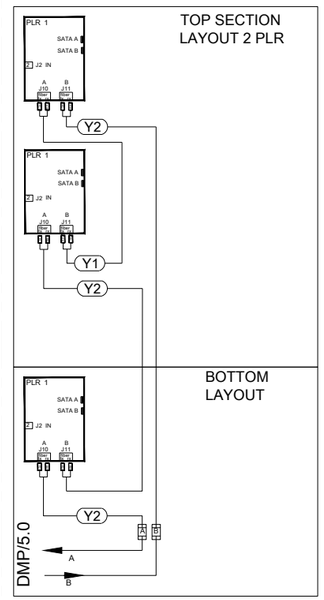

POWER ENTRANCE LOCATION

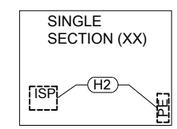

2 HORIZONTAL ELECTRICAL SECTIONS

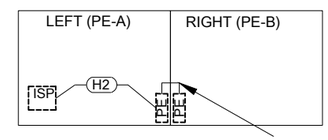

3 HORIZONTAL ELECTRICAL SECTIONS

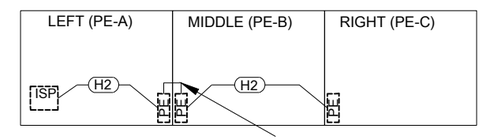

2 VERTICAL ELECTRICAL SECTIONS

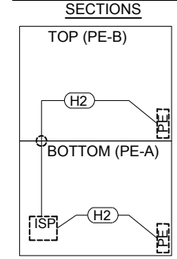

4 ELECTRICAL SECTION

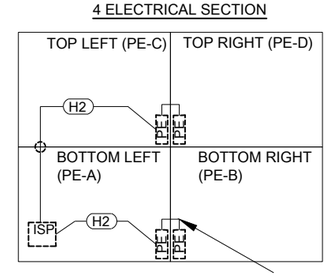

6 ELECTRICAL SECTION

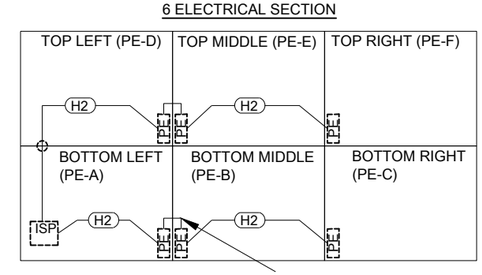

2 HORIZONTAL SECTION

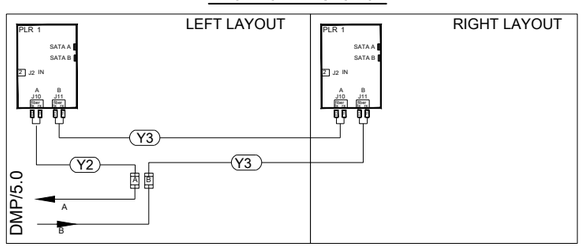

NOTE:

2 PLRS NEEDED WHEN SECTION EXCEEDS 182 MODS

FRONT VIEW

8 ELECTRICAL SECTIONS

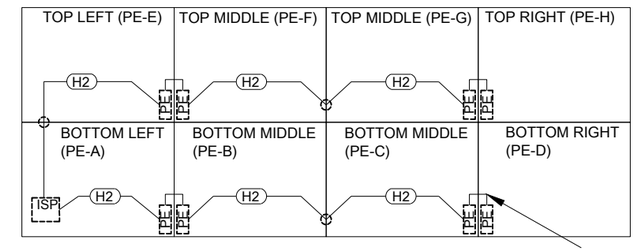

4 SECTION

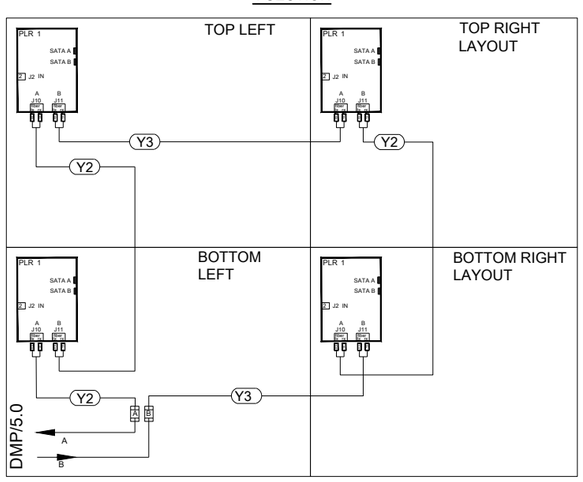

COMMON WITH ALL SECTIONS

*APPLY LU-1002 TO 2P MALE END OF W-2502 BEFORE INSERTION

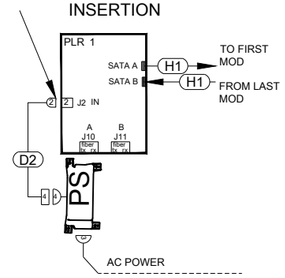

4 SECTION

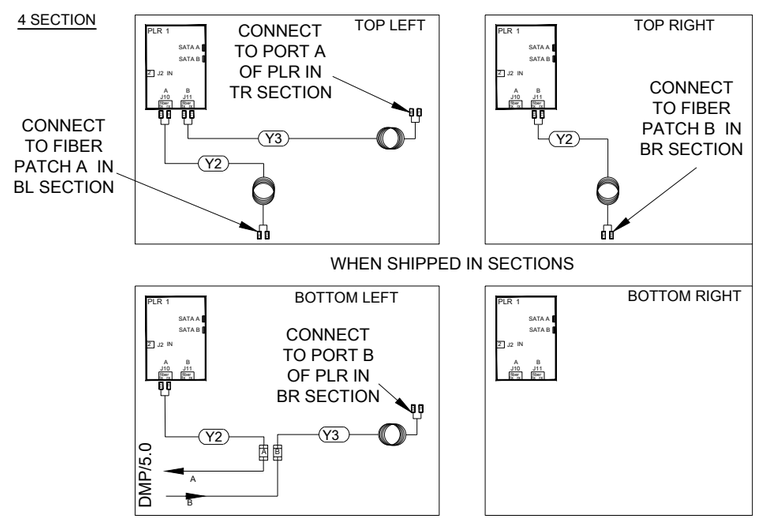

LEGEND

HARNESS - REFER TO BOM FOR QTY

- (Y1) W-1864 FIBER DUPLEX PATCH, 50uM, LC-LC, 10'
- (Y2) W-1685 FIBER DUPLEX PATCH, 50uM, LC-LC, 33'
- (Y3) W-1865 FIBER DUPLEX PATCH, 50uM, LC-LC, 50'
- (H1) W- SATA CABLE, SEE BOM
- (H2) W-4109938 HARN; 2P MNL TO 2P MNL, RVS GENDER, SEALED, 18AWG
- (D2) W-2502 HARN; 4P FEM. MNL TO SLC PLUG 36"

(PE) POWER ENTRANCE

THE CONCEPTS EXPRESSED AND DETAILS SHOWN ON THIS DRAWING ARE CONFIDENTIAL AND PROPRIETARY. DO NOT REPRODUCE BY ANY MEANS WITHOUT THE EXPRESS WRITTEN CONSENT OF DAKTRONICS, INC. OR ITS WHOLLY OWNED SUBSIDIARIES. COPYRIGHT 2019 DAKTRONICS, INC. (USA)

DAKTRONICS

THIRD ANGLE PROJECTION

PROJECT:	BLD-0100 DIGITAL BILLBOARD		
TITLE:	BLOCK DIAGRAM; FIBER ROUTING, PLR & PE WIRING		
DATE: 11 FEB 19	DIM UNITS: INCHES [MILLIMETERS]	SHEET	REV
SCALE: NONE	DO NOT SCALE DRAWING		00
DESIGN: JLAIRD	JOB NO.	FUNC - TYPE - SIZE	4118211
DRAWN: JLAIRD	P2053	R - 01 - B	