MASTER CONFIGURATION

0A-1192-4252 – 120VAC 0A-1192-2436 – 120VAC WIDE

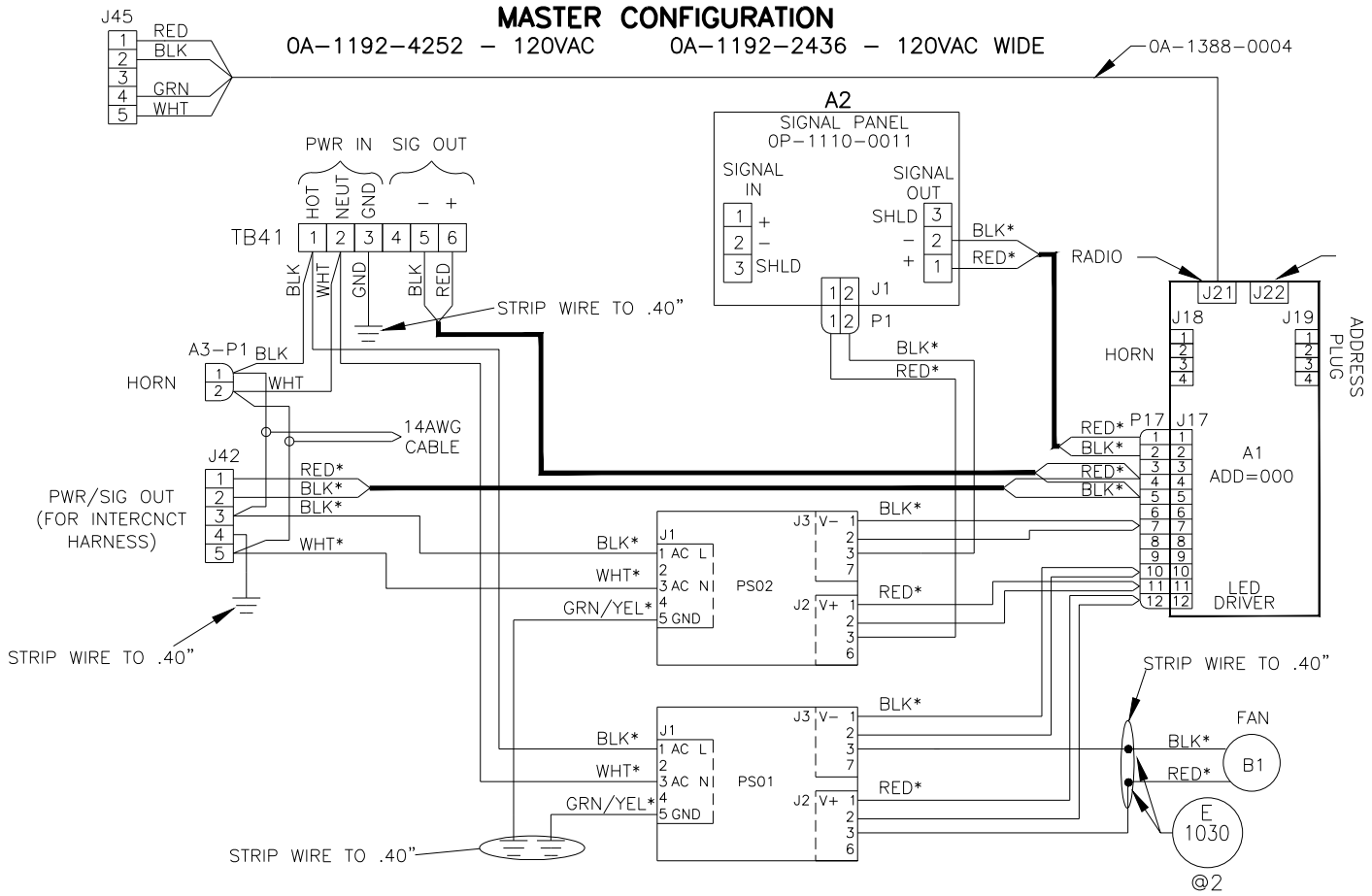

ALL CONDUCTORS ARE 14 AWG EXCEPT * INDICATES 18AWG CONDUCTORS.
ALL SIGNAL CONDUCTORS ARE ALSO 18 AWG CONDUCTORS.

REFERENCE DWG 1192-R03C-285776 FOR DETAILED CABLE ASSEMBLY DIAGRAM.

SLAVE CONFIGURATION

0A-1192-4253 – 120VAC 0A-1192-2437 – 120VAC WIDE

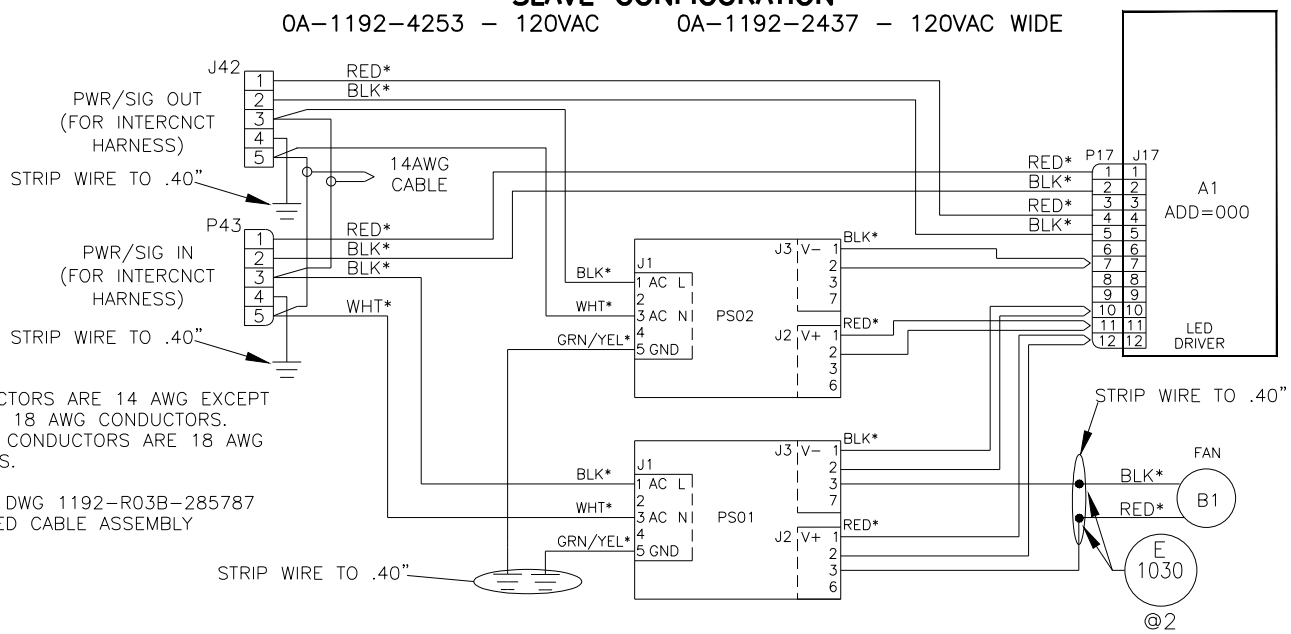

ALL CONDUCTORS ARE 14 AWG EXCEPT * INDICATES 18 AWG CONDUCTORS.
ALL SIGNAL CONDUCTORS ARE 18 AWG CONDUCTORS.

REFERENCE DWG 1192-R03B-285787 FOR DETAILED CABLE ASSEMBLY DIAGRAM.

REV	DATE:		BY:
06	17 OCT 10	STRIP LENGTH OF LOOSE-END WIRES ADJUSTED TO .40 INCHES, PER ECO 65629.	SMB
05	05 NOV 07	REMOVED 240V FROM THIS DWG AND MADE NEW 324504 DWG FOR 240V SETUP.	AMG
04	9 APR 07	ADDED GND WIRES TO P43, & J42	DMD
03	11 MAR 07	ADDED TB41 FOR SIGNAL RE-DRIVE	DMD
02	11 JAN 07	UPDATED 240V OA PACKET INFORMATION	JDD

DAKTRONICS, INC.
BROOKINGS, SD 57006
DO NOT SCALE DRAWING

THE CONCEPTS EXPRESSED AND DETAILS SHOWN ON THIS DRAWING ARE CONFIDENTIAL AND PROPRIETARY. DO NOT REPRODUCE BY ANY MEANS WITHOUT THE EXPRESSED WRITTEN CONSENT OF DAKTRONICS, INC. COPYRIGHT 2010 DAKTRONICS, INC.

PROJ: OUTDOOR LED SCOREBOARDS
TITLE: SCHEMATIC: GEN IV OUTDOOR LED- 16 COL DRIVER
DESIGN: DRAWN: DDINING DATE: 25 SEP 06
SCALE: NONE

SHEET	REV	JOB NO:	FUNC-TYPE-SIZE	
	06	1192	R-03-A	285779